# NETWORK PRODUCT

## RF BALUN TRANSFORMER

RoHS COMPLIANT · REACh COMPLIANT · HALOGEN FREE

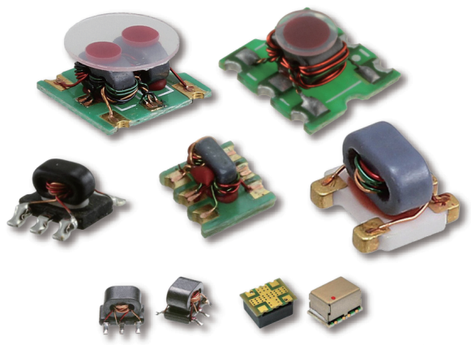

**Features And Benefits:**

- Multi Band Filter & Modules
- Diplexers/Triplexers
- High Rejection, Low Loss
- Excellent Return Loss
- Compliant to Docsis & MoCA
- Transmission Line Baluns & Splitters
- Operating Temperature -40°C Up To +85°C

**Applications:**

- Cable Modem
- Intelligent Retail Cabinet
- Talkback
- Satellite Distribution
- Walkie-Talkie
- CATV Amplifier Module

沃虎电子开发了多种类RF射频磁性器件可供客户选择。我们与主流IC厂商保持密切的沟通，了解客户所需，从而有效地减少客户设计所需的尺寸和成本。我们提供各种应用的射频产品，包括了调制解调器，智能零售柜，流媒体后视镜，对讲机等应用。我们提供高质量的定向耦合器和分路/合成磁性器件，以满足您最苛刻的网络应用。所有批量生产的射频耦合器和分离器均符合RoHS规范。

VOOHU Has Developed A Wide Selection Of RF Products For Its Customers. We Keep Pace With Current IC Vendor Requirements And We Know What It Takes To Effectively Reduce Your Design Size And Costs. We Supply Products For A Variety Of RF Applications Including Cable Modem, Intelligent Retail Cabinet, Streaming Media Rearview Mirror, Talkback And Walkie-Talkie Applications. We Offer A High-Quality Line Of Directional Coupler And Splitter/Combiner Components To Meet Your Most Demanding Network Applications. All RF Couplers And Splitters Meet RoHS Specifications And Are Available For High-Volume Production.



- The Latest Changes Without Notice, Or The Latest Changes And Information Please Contact With Us!
- The Product Data Only Shows The Basic Parameter Characteristics, He Detailed Application Requirements And Matters Needing Attention Should Be Confirmed To Us

| Part Number | Frequency (MHz) | Out1 Loss (dB Max) | Out2 Loss (dB Max) | Input Return Loss (dB Min) | Output1 Return Loss (dB Min) | Output2 Return Loss (dB Min) | Isolation (dB Min) | Zo (Ω) |
|---|---|---|---|---|---|---|---|---|
| WHFS06A108S | 5-1250 | 1.5 | 1.5 | 22.0 | 0.2 | 2.0 | 16.0 | 75 |

| Part Number | Frequency (MHz) | Insertion Loss (dB Max) | Input Return Loss (dB Min) | Amplitude (dB Typ) | Phase (° Typ) | Ω Ratio (PRI:SEC) | Zo (Ω) |
|---|---|---|---|---|---|---|---|
| WHFS06A071T | 5-1250 | 3.5 | 16.0 | 0.5 | 8.0 | 1:2 | 75 |

**NOTES:**

1. Electrical Specifications @ 25°C
2. All Information Is Reference Only. See Datasheet For Specific Information.

**Mechanical(Unit:mm) & Schematics**

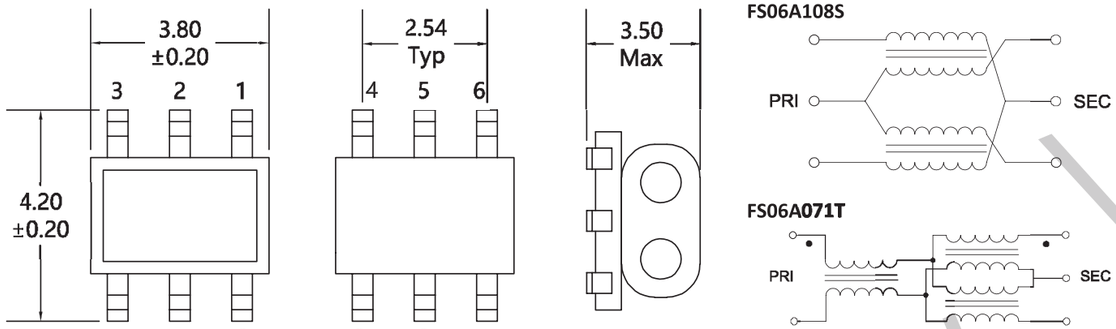


| Part Number | Frequency (MHz) | Insertion Loss (dB Max) | Coupling (dB Typ) | Input Return Loss (dB Min) | Output Return Loss (dB Min) | Coupling Return Loss (dB Min) | Isolation (dB Min) | Zo (Ω) |
|---|---|---|---|---|---|---|---|---|
| WHFS06B067C | 5-1020 | 1.2 | 17.3 | 16.0 | 16.0 | 18.0 | 20.0 | 75 |
| WHFS06B068C | 5-1250 | 3.0 | 6.8 | 13.0 | 16.0 | 14.0 | 16.0 | 75 |
| WHFS06B069C | 5-1250 | 1.5 | 12.0 | 16.0 | 16.0 | 16.0 | 18.0 | 75 |
| WHFS06B06AC | 5-1250 | 1.2 | 17.0 | 19.0 | 20.0 | 20.0 | 25.0 | 75 |
| WHFS06B06BC | 5-1250 | 1.0 | 19.8 | 18.0 | 18.0 | 18.0 | 25.0 | 75 |
| WHFS06B06CC | 5-1500 | 1.0 | 18.0 | 20.0 | 20.0 | 20.0 | 25.0 | 75 |

**NOTES:**

1. Electrical Specifications @ 25°C
2. All Information Is Reference Only. See Datasheet For Specific Information.

- The Latest Changes Without Notice, Or The Latest Changes And Information Please Contact With Us!
- The Product Data Only Shows The Basic Parameter Characteristics, He Detailed Application Requirements And Matters Needing Attention Should Be Confirmed To Us



VOOHU

## Mechanical(Unit:mm) & Schematics

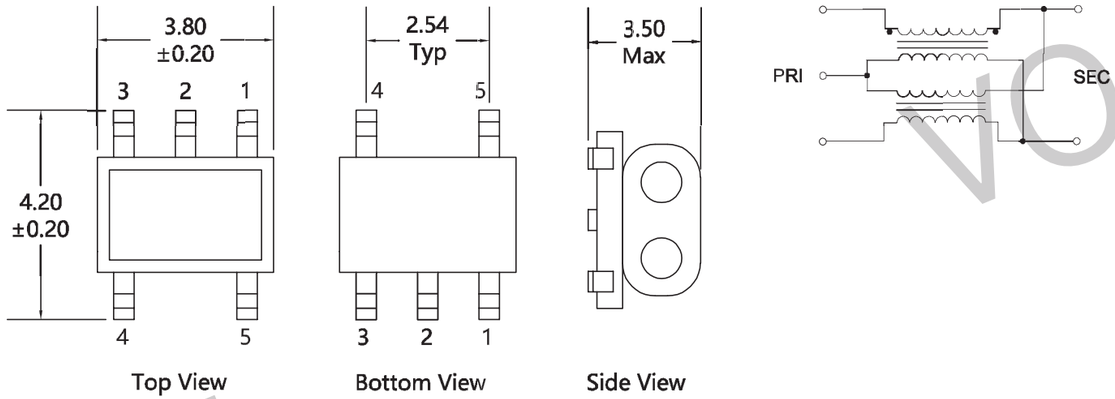


| Part Number | Frequency (MHz) | Insertion Loss (dB Max) | Coupling (dB Typ) | Input Return Loss (dB Min) | Output Return Loss (dB Min) | Coupling Return Loss (dB Min) | Isolation (dB Min) | Zo (Ω) |
|---|---|---|---|---|---|---|---|---|
| WHFS36106DC | 5-1250 | 1.7 | 10.0 | 18.0 | 20.0 | 18.0 | 18.0 | 75 |

**NOTES:**

1. Electrical Specifications @ 25°C
2. All Information Is Reference Only. See Datasheet For Specific Information.

## Mechanical(Unit:mm) & Schematics

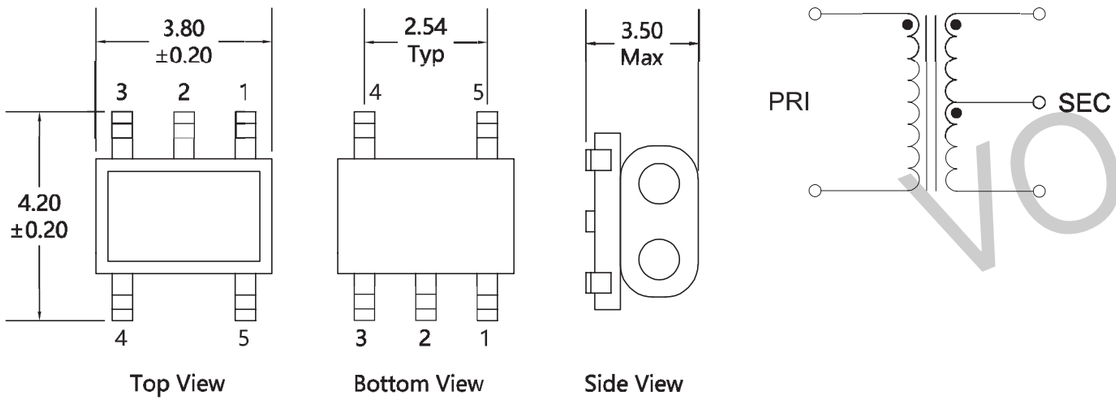




- The Latest Changes Without Notice, Or The Latest Changes And Information Please Contact With Us!
- The Product Data Only Shows The Basic Parameter Characteristics, He Detailed Application Requirements And Matters Needing Attention Should Be Confirmed To Us

| Part Number | Frequency (MHz) | Out1 Loss (dB Max) | Out2 Loss (dB Max) | Input Return Loss (dB Min) | Output1 Return Loss (dB Min) | Output2 Return Loss (dB Min) | Isolation (dB Min) | Zo (Ω) |
|---|---|---|---|---|---|---|---|---|
| WHFS063109S | 5-1600 | 1.4 | 1.2 | 11.0 | 14.0 | 16.0 | 12.0 | 75 |

**NOTES:**

1. Electrical Specifications @ 25°C
2. All Information Is Reference Only. See Datasheet For Specific Information.

## Mechanical(Unit:mm) & Schematics

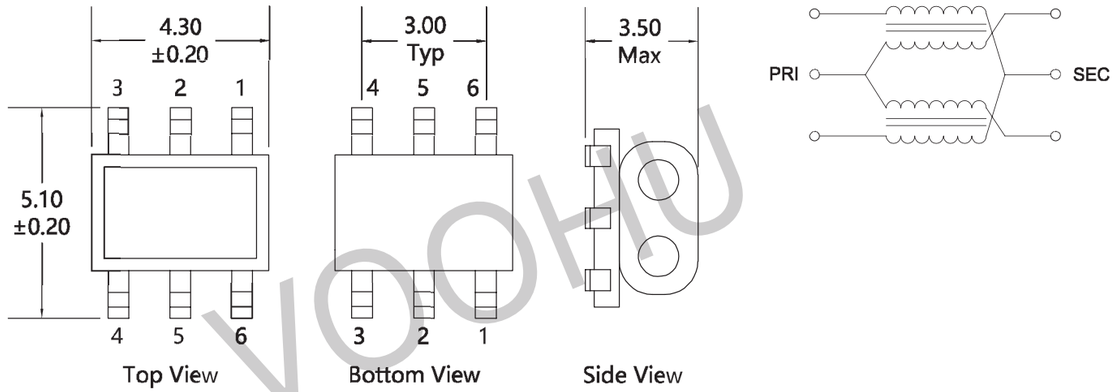


| Part Number | Frequency (MHz) | Insertion Loss (dB Max) | Input Return Loss (dB Min) | Amplitude (dB Typ) | Phase (° Typ) | Ω Ratio (PRI:SEC) | Zo (Ω) |
|---|---|---|---|---|---|---|---|
| WHFS063082T | 0.3-800 | 3.5 | 5.0 | 0.5 | 10.0 | 1:4 | 50 |

**NOTES:**

1. Electrical Specifications @ 25°C
2. All Information Is Reference Only. See Datasheet For Specific Information.

## Mechanical(Unit:mm) & Schematics

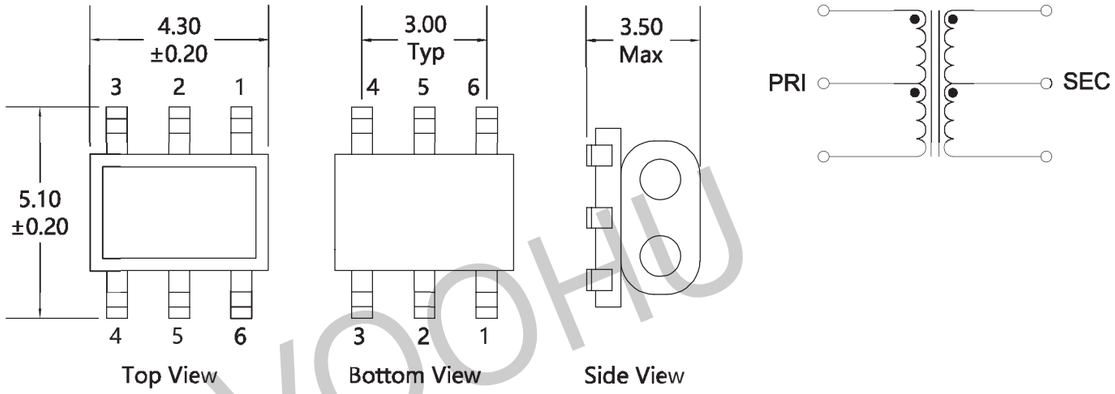




- The Latest Changes Without Notice, Or The Latest Changes And Information Please Contact With Us!
- The Product Data Only Shows The Basic Parameter Characteristics, He Detailed Application Requirements And Matters Needing Attention Should Be Confirmed To Us

VOOHU

| Part Number | Frequency (MHz) | Insertion Loss (dB Max) | Coupling (dB Typ) | Input Return Loss (dB Min) | Output Return Loss (dB Min) | Coupling Return Loss (dB Min) | Isolation (dB Min) | Zo (Ω) |
|---|---|---|---|---|---|---|---|---|
| WHFS064063C | 5-1000 | 1.5 | 15.0 | 16.0 | 16.0 | 16.0 | 20.0 | 75 |
| WHFS064064C | 5-1000 | 1.3 | 16.0 | 18.0 | 18.0 | 18.0 | 20.0 | 75 |
| WHFS064065C | 5-1200 | 1.5 | 17.3 | 16.0 | 16.0 | 16.0 | 16.0 | 75 |
| WHFS064066C | 5-1250 | 2.5 | 8.3 | 16.0 | 16.0 | 16.0 | 16.0 | 75 |

**NOTES:**
1. Electrical Specifications @ 25°C
2. All Information Is Reference Only. See Datasheet For Specific Information.

## Mechanical(Unit:mm) & Schematics

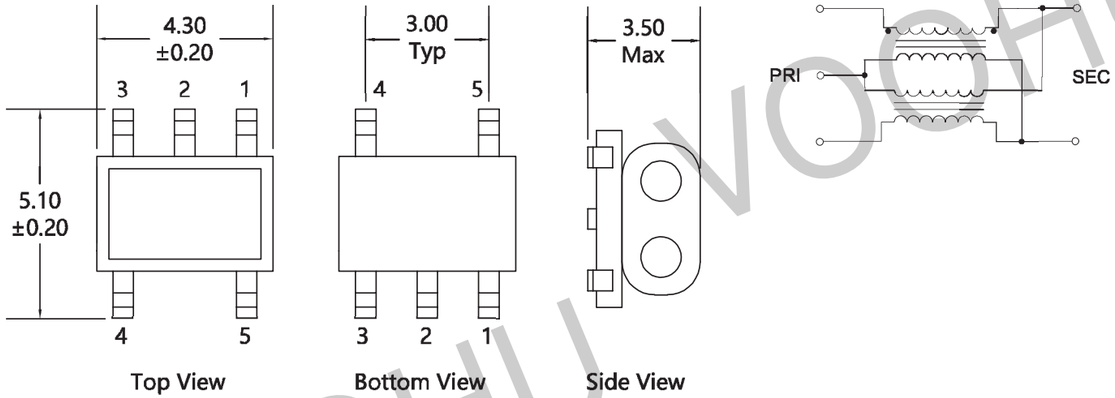


| Part Number | Frequency (MHz) | Insertion Loss (dB Max) | Input Return Loss (dB Min) | Amplitude (dB Typ) | Phase (° Typ) | Ω Ratio (PRI:SEC) | Zo (Ω) |
|---|---|---|---|---|---|---|---|
| WHFS064014T | 8-750 | 3.0 | 10.0 | 0.5 | 10.0 | 1:4 | 50 |
| WHFS064016T | 5-200 | 1.5 | 10.0 | 0.5 | 5.0 | 1:1 | 75 |
| WHFS064121T | 5-1250 | 2.0 | 10.0 | 0.2 | 6.0 | 1:4 | 50 |
| WHFS064132T | 5-1250 | 2.0 | 10.0 | 0.2 | 6.0 | 1:1 | 75 |

**NOTES:**
1. Electrical Specifications @ 25°C
2. All Information Is Reference Only. See Datasheet For Specific Information.



- The Latest Changes Without Notice, Or The Latest Changes And Information Please Contact With Us!
- The Product Data Only Shows The Basic Parameter Characteristics, He Detailed Application Requirements And Matters Needing Attention Should Be Confirmed To Us

## Mechanical(Unit:mm) & Schematics

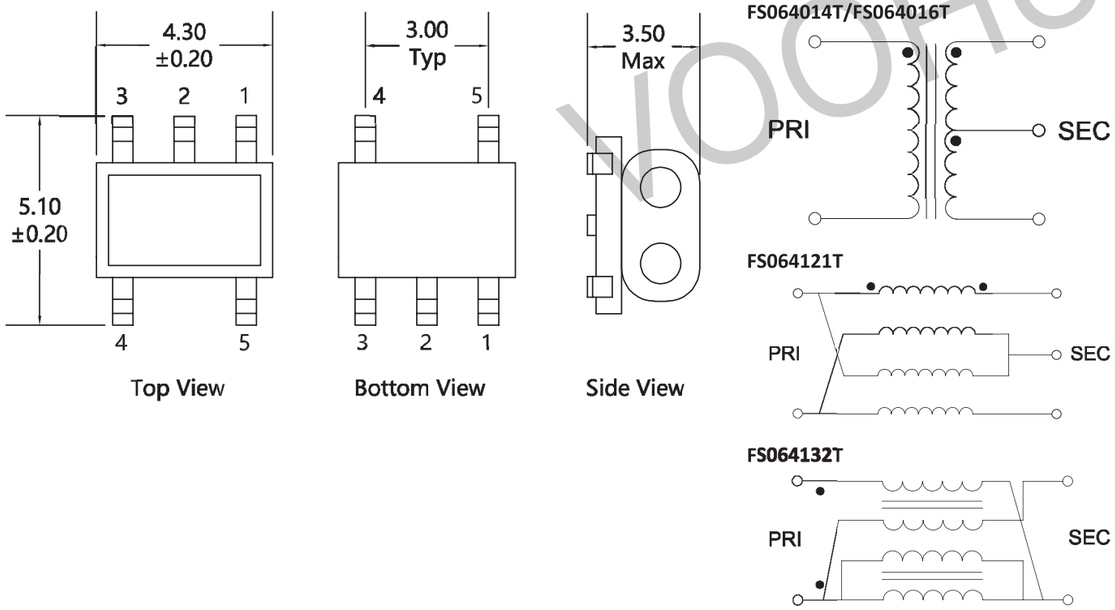


| Part Number | Frequency (MHz) | Out1 Loss (dB Max) | Out2 Loss (dB Max) | Input Return Loss (dB Min) | Output1 Return Loss (dB Min) | Output2 Return Loss (dB Min) | Isolation (dB Min) | Zo (Ω) |
|---|---|---|---|---|---|---|---|---|
| WHFS06510AS | 5-1000 | 2.5 | 3.0 | 15.0 | 20.0 | 25.0 | 12.0 | 75 |

**NOTES:**
1. Electrical Specifications @ 25°C
2. All Information Is Reference Only. See Datasheet For Specific Information.

## Mechanical(Unit:mm) & Schematics

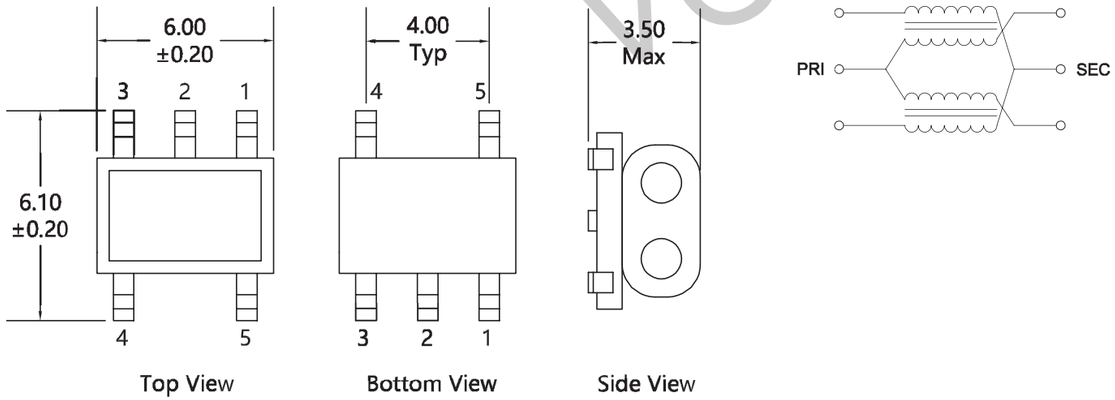


- The Latest Changes Without Notice, Or The Latest Changes And Information Please Contact With Us!
- The Product Data Only Shows The Basic Parameter Characteristics, He Detailed Application Requirements And Matters Needing Attention Should Be Confirmed To Us



VOOHU

| Part Number | Frequency (MHz) | Insertion Loss (dB Max) | Input Return Loss (dB Min) | Amplitude (dB Typ) | Phase (° Typ) | Ω Ratio (PRI:SEC) | Zo (Ω) |
|---|---|---|---|---|---|---|---|
| WHFS065011T | 5-100 | 2.0 | 4.0 | 0.1 | 3.0 | 2:1 | 75 |
| WHFS068013C | 5-200 | 3.0 | 3.0 | 0.6 | 1.2 | 4:1 | 75 |

**NOTES:**
1. Electrical Specifications @ 25°C
2. All Information Is Reference Only. See Datasheet For Specific Information.

## Mechanical(Unit:mm) & Schematics

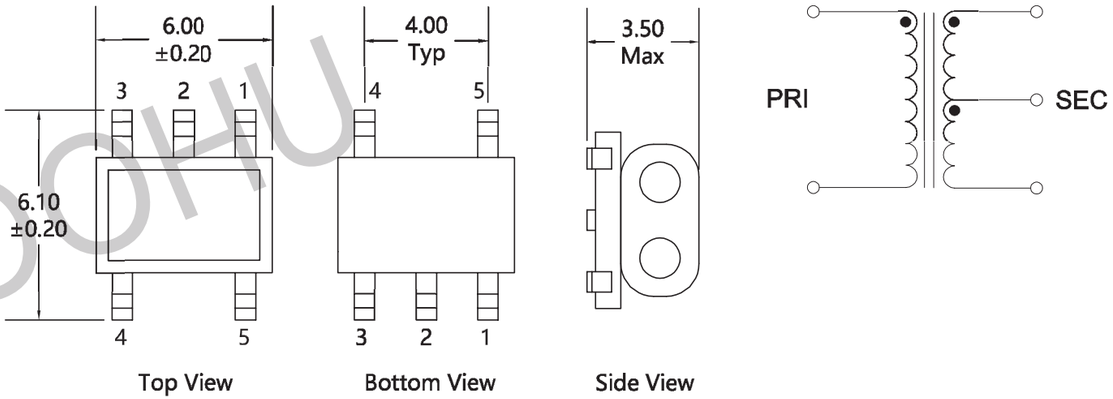


| Part Number | Frequency (MHz) | Out1 Loss (dB Max) | Out2 Loss (dB Max) | Input Return Loss (dB Min) | Output1 Return Loss (dB Min) | Output2 Return Loss (dB Min) | Isolation (dB Min) | Zo (Ω) |
|---|---|---|---|---|---|---|---|---|
| WHFS166101S | 5-1250 | 1.5 | 1.5 | 16.0 | 0.2 | 2.0 | 16.0 | 75 |
| WHFS166102S | 1-250 | 0.5 | 0.5 | 22.0 | 0.2 | 2.0 | 20.0 | 75 |
| WHFS166103S | 5-1250 | 1.5 | 1.5 | 16.0 | 0.2 | 2.0 | 16.0 | 75 |
| WHFS166104S | 5-1250 | 2.0 | 1.5 | 10.0 | 10.0 | 10.0 | 16.0 | 75 |
| WHFS166105S | 5-1250 | 1.2 | 1.5 | 16.0 | 0.2 | 4.0 | 16.0 | 75 |
| WHFS166106S | 5-1000 | 1.4 | 1.2 | 11.0 | 14.0 | 16.0 | 12.0 | 75 |
| WHFS166107S | 5-1250 | 1.5 | 2.1 | 16.0 | 0.2 | 4.0 | 16.0 | 75 |

**NOTES:**
1. Electrical Specifications @ 25°C
2. All Information Is Reference Only. See Datasheet For Specific Information.

OOHU



- The Latest Changes Without Notice, Or The Latest Changes And Information Please Contact With Us!
- The Product Data Only Shows The Basic Parameter Characteristics, He Detailed Application Requirements And Matters Needing Attention Should Be Confirmed To Us

## Mechanical(Unit:mm) & Schematics

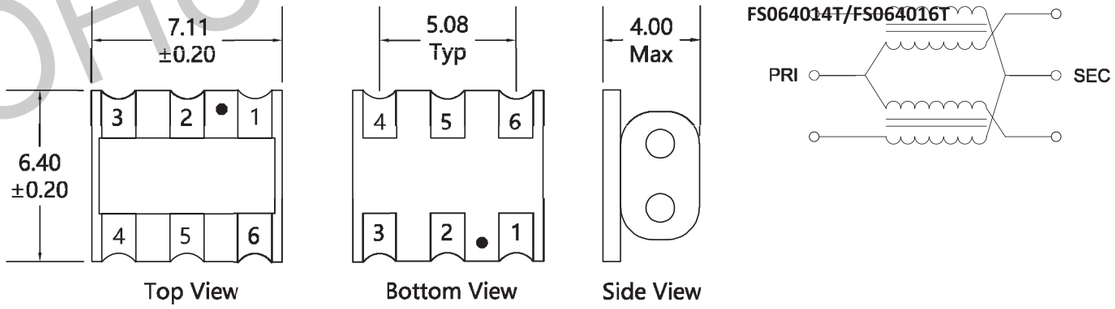


| Part Number | Frequency (MHz) | Insertion Loss (dB Max) | Input Return Loss (dB Min) | Amplitude (dB Typ) | Phase (° Typ) | Ω Ratio (PRI:SEC) | Zo (Ω) |
|---|---|---|---|---|---|---|---|
| WHFS166012T | 0.3-125 | 2.5 | 6.0 | 0.2 | 5.0 | 1:1 | 50 |
| WHFS166031T | 20-1200 | 2.0 | 8.0 | 0.5 | 4.0 | 1:1 | 50 |
| WHFS166082T | 0.3-125 | 1.0 | 10.0 | 0.2 | 9.1 | 1:4 | 50 |

**NOTES:**
1. Electrical Specifications @ 25°C
2. All Information Is Reference Only. See Datasheet For Specific Information.

## Mechanical(Unit:mm) & Schematics

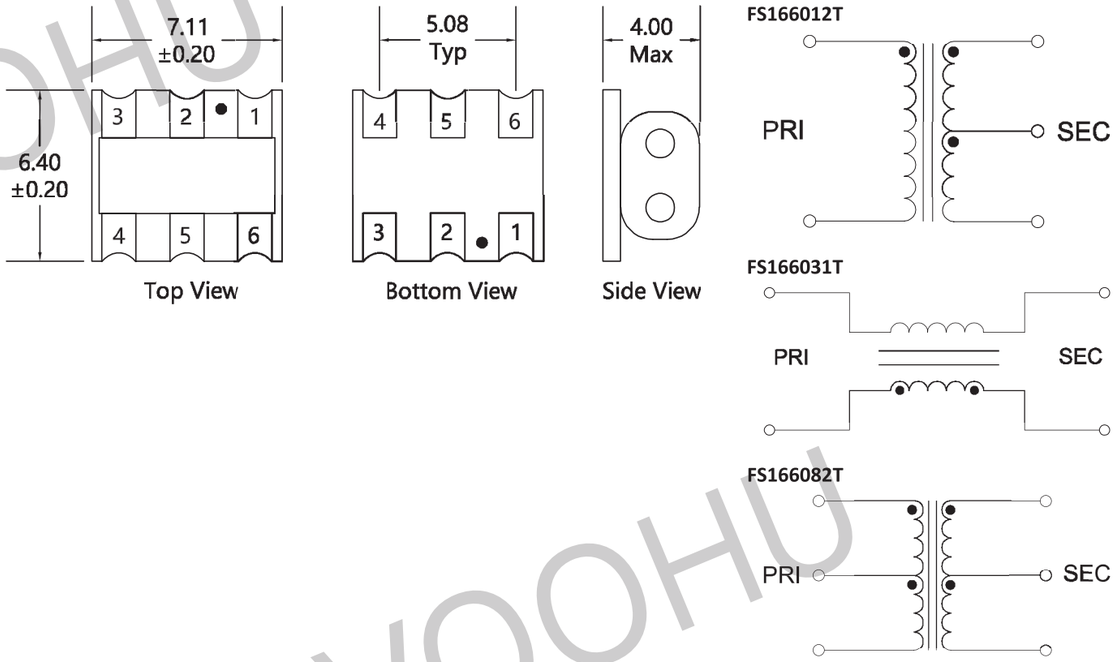


VOOHU

- The Latest Changes Without Notice, Or The Latest Changes And Information Please Contact With Us!
- The Product Data Only Shows The Basic Parameter Characteristics, He Detailed Application Requirements And Matters Needing Attention Should Be Confirmed To Us

| Part Number | Frequency (MHz) | Insertion Loss (dB Max) | Input Return Loss (dB Min) | Amplitude (dB Typ) | Phase (° Typ) | Ω Ratio (PRI:SEC) | Zo (Ω) |
|---|---|---|---|---|---|---|---|
| WHFS167011T | 5-300 | 1.5 | 10.0 | 0.2 | 2.0 | 1:2 | 75 |

**NOTES:**
1. Electrical Specifications @ 25°C
2. All Information Is Reference Only. See Datasheet For Specific Information.

## Mechanical(Unit:mm) & Schematics

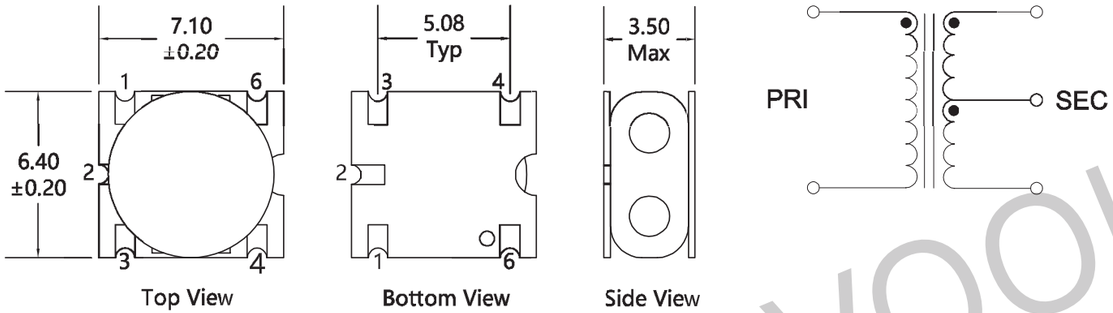


| Part Number | Frequency (MHz) | Out1 Loss (dB Max) | Out2 Loss (dB Max) | Input Return Loss (dB Min) | Output1 Return Loss (dB Min) | Output2 Return Loss (dB Min) | Isolation (dB Min) | Zo (Ω) |
|---|---|---|---|---|---|---|---|---|
| WHFS16810BS | 5-2400 | 2.5 | 4.0 | 22.0 | 11.0 | 9.0 | 12.0 | 75 |
| WHFS16810CS | 5-1600 | 1.4 | 1.2 | 11.0 | 14.0 | 16.0 | 12.0 | 75 |

**NOTES:**
1. Electrical Specifications @ 25°C
2. All Information Is Reference Only. See Datasheet For Specific Information.

## Mechanical(Unit:mm) & Schematics

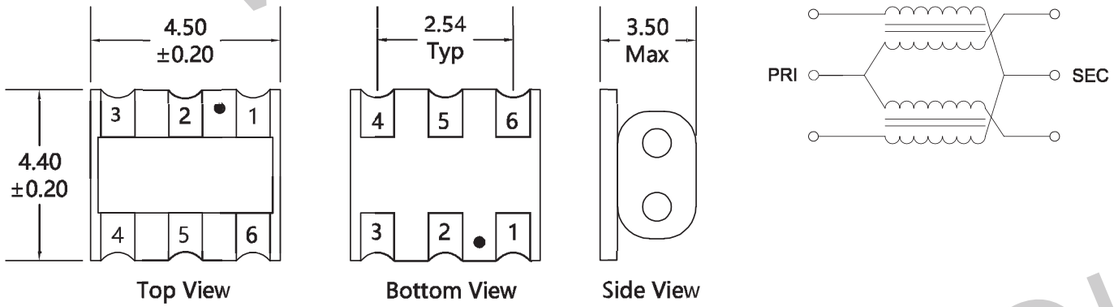




- The Latest Changes Without Notice, Or The Latest Changes And Information Please Contact With Us!
- The Product Data Only Shows The Basic Parameter Characteristics, He Detailed Application Requirements And Matters Needing Attention Should Be Confirmed To Us

| Part Number | Frequency (MHz) | Insertion Loss (dB Max) | Input Return Loss (dB Min) | Amplitude (dB Typ) | Phase (° Typ) | Ω Ratio (PRI:SEC) | Zo (Ω) |
|---|---|---|---|---|---|---|---|
| WHFS168031T | 5-1250 | 3.5 | 13.0 | 2.0 | 12.0 | 1:1 | 50 |

**NOTES:**
1. Electrical Specifications @ 25°C
2. All Information Is Reference Only. See Datasheet For Specific Information.

## Mechanical(Unit:mm) & Schematics

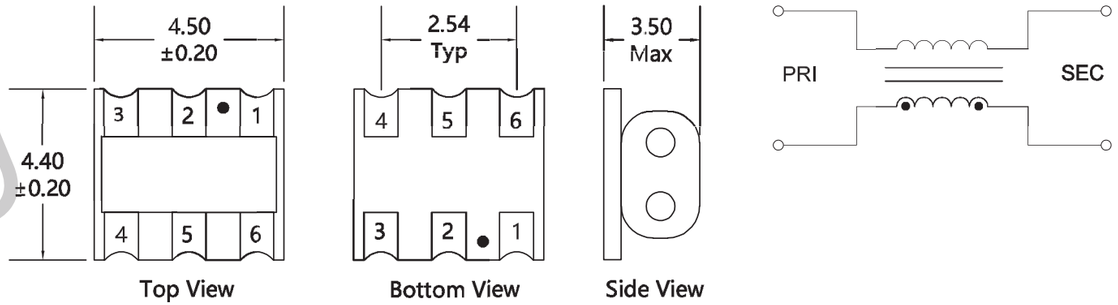


| Part Number | Frequency (MHz) | Insertion Loss (dB Max) | Coupling (dB Typ) | Input Return Loss (dB Min) | Output Return Loss (dB Min) | Coupling Return Loss (dB Min) | Isolation (dB Min) | Zo (Ω) |
|---|---|---|---|---|---|---|---|---|
| WHFS36106DC | 5-1250 | 1.7 | 10.0 | 18.0 | 20.0 | 18.0 | 18.0 | 75 |

**NOTES:**
1. Electrical Specifications @ 25°C
2. All Information Is Reference Only. See Datasheet For Specific Information.

## Mechanical(Unit:mm) & Schematics

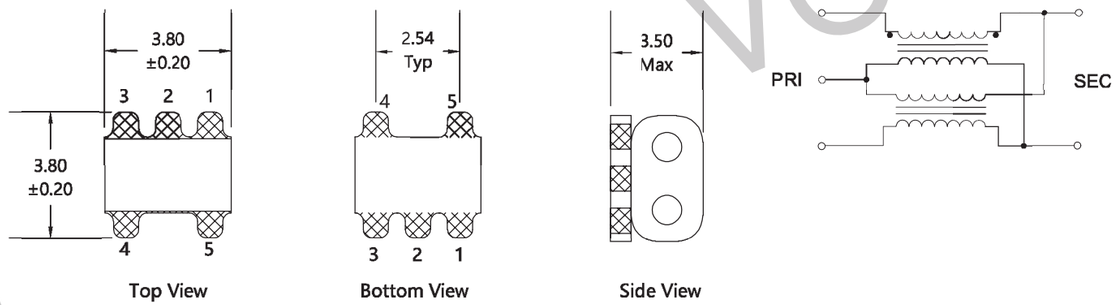




- The Latest Changes Without Notice, Or The Latest Changes And Information Please Contact With Us!
- The Product Data Only Shows The Basic Parameter Characteristics, He Detailed Application Requirements And Matters Needing Attention Should Be Confirmed To Us

VOOHU

| Part Number | Frequency (MHz) | Insertion Loss (dB Max) | Input Return Loss (dB Min) | Amplitude (dB Typ) | Phase (° Typ) | Ω Ratio (PRI:SEC) | Zo (Ω) |
|---|---|---|---|---|---|---|---|
| WHFS361011T | 0.3-500 | 2.5 | 10.0 | 0.5 | 5.0 | 1:2 | 50 |
| WHFS361017T | 5-130 | 1.8 | 13.0 | 0.2 | 0.5 | 1:9 | 50 |
| WHFS361032T | 3-3000 | 3.5 | 13.0 | 2.0 | 12.0 | 1:1 | 75 |
| WHFS361121T | 10-1900 | 3.5 | 5.0 | 0.2 | 10.0 | 1:4 | 50 |
| WHFS361132T | 30-1250 | 1.5 | 10.0 | 0.2 | 5.0 | 1:1 | 75 |
| WHFS363014C | 2-800 | 3.0 | 13.0 | 0.5 | 5.0 | 1:4 | 50 |

**NOTES:**
1. Electrical Specifications @ 25°C
2. All Information Is Reference Only. See Datasheet For Specific Information.

## Mechanical(Unit:mm) & Schematics

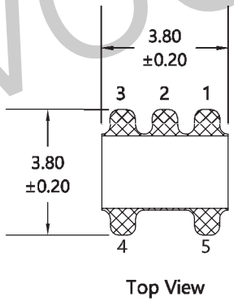

Top View

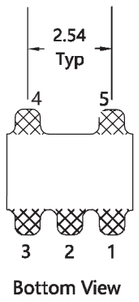

Bottom View

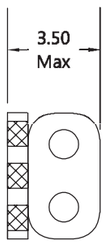

Side View

FS361011T/FS361017T/FS363014C

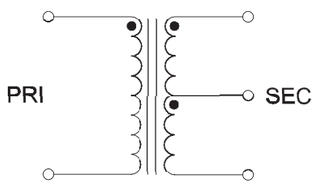


FS361032T

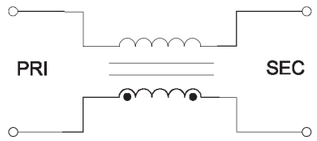


FS361121T

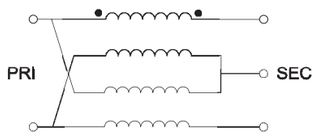


FS361132T

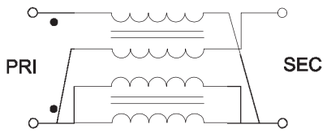




- The Latest Changes Without Notice, Or The Latest Changes And Information Please Contact With Us!
- The Product Data Only Shows The Basic Parameter Characteristics, He Detailed Application Requirements And Matters Needing Attention Should Be Confirmed To Us

| Part Number | Frequency (MHz) | Insertion Loss (dB Max) | Coupling (dB Typ) | Input Return Loss (dB Min) | Output Return Loss (dB Min) | Coupling Return Loss (dB Min) | Isolation (dB Min) | Zo (Ω) |
|---|---|---|---|---|---|---|---|---|
| WHFS36506EC | 5-2250 | 2.0 | 16.5 | 11.0 | 12.0 | 10.0 | 22.0 | 75 |

**NOTES:**
1. Electrical Specifications @ 25°C
2. All Information Is Reference Only. See Datasheet For Specific Information.

## Mechanical(Unit:mm) & Schematics

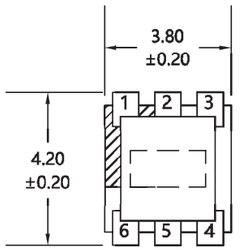

Top View

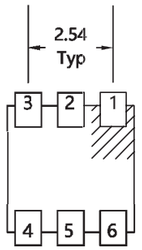

Bottom View

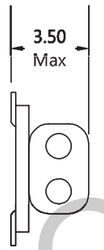

Side View

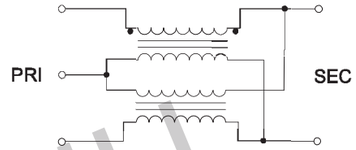


| Part Number | Frequency (MHz) | Insertion Loss (dB Max) | Input Return Loss (dB Min) | Amplitude (dB Typ) | Phase (° Typ) | Ω Ratio (PRI:SEC) | Zo (Ω) |
|---|---|---|---|---|---|---|---|
| WHFS365021T | 1.5-500 | 2.0 | 12.0 | 0.5 | 5.0 | 1:1 | 50 |
| WHFS365131T | 10-4000 | 4.5 | 8.0 | 1.0 | 8.0 | 1:1 | 50 |

**NOTES:**
1. Electrical Specifications @ 25°C
2. All Information Is Reference Only. See Datasheet For Specific Information.

## Mechanical(Unit:mm) & Schematics

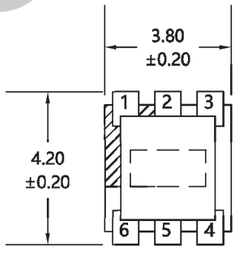

Top View

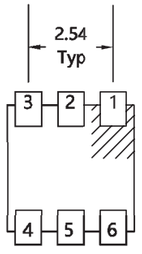

Bottom View

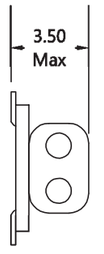

Side View

FS365021T

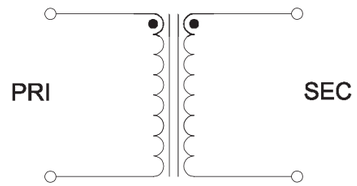


FS365131T

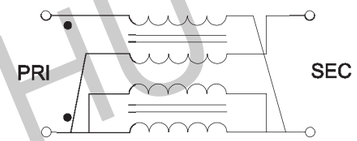


- The Latest Changes Without Notice, Or The Latest Changes And Information Please Contact With Us!
- The Product Data Only Shows The Basic Parameter Characteristics, He Detailed Application Requirements And Matters Needing Attention Should Be Confirmed To Us



VOOHU